ACSP · Analog Circuits And Signal Processing

Viranjay M. Srivastava
Ghanshyam Singh

MOSFET Technologies for Double-Pole Four-Throw Radio-Frequency Switch

Springer

Analog Circuits and Signal Processing

Series Editors:

For further volumes:
http://www.springer.com/series/7381

Viranjay M. Srivastava • Ghanshyam Singh

MOSFET Technologies for Double-Pole Four-Throw Radio-Frequency Switch

Springer

Viranjay M. Srivastava
Assistant Professor
Department of Electronics
and Communication Engineering
Jaypee University of Information
Technology
Solan, Himachal Pradesh
India

Ghanshyam Singh
Professor
Department of Electronics
and Communication Engineering
Jaypee University of Information
Technology
Solan, Himachal Pradesh
India

ISBN 978-3-319-01164-6 ISBN 978-3-319-01165-3 (eBook)
DOI 10.1007/978-3-319-01165-3
Springer Cham Heidelberg New York Dordrecht London

Library of Congress Control Number: 2013946571

Printed on acid-free paper

Springer is part of Springer Science+Business Media (www.springer.com)

Contents

List of Figures

List of Tables

Abstract

With the development of modern silicon technology, more and more high-frequency circuits can be implemented in standard complementary metal-oxide-semiconductor (CMOS) processes. The feasibility of RF ICs in standard CMOS process is established, and the trend in putting all components of a system on a chip includes integration of the transceiver (T/R) antenna switch.

In this book, we have designed a double-gate (DG) MOSFET and double-pole four-throw (DP4T) RF switch to enhance its performance for the next generation wireless communication systems. Further we have combined the ideas of DG MOSFET and DP4T switch to design a novel DP4T DG RF CMOS switch. The designed DP4T DG RF CMOS switch can route four inputs to two outputs at a time or vice versa. So it is twice effective as compared to the previously existing SPDT switches.

In the DG MOSFET, the gates are only on the two sides of the substrate. Hence, to utilize all the sides of the substrate, we have widened the gate all around the device and designed like a cylinder. Therefore, we extend this work to the cylindrical surrounding double-gate (CSDG) MOSFET. It has less contact area with the board compared to the other MOSFETs. Due to the circular source and drain, the gate contact with the source and drain is on a long circular region, which avoids the gate misalignment. This work has been extended by replacing SiO_2 with HfO_2 as a high dielectric material to design DG MOSFET.

Finally, we have analyzed the image acquisition of DG MOSFET and CSDG MOSFETs for the purpose of RF switch. The proposed model emphasized on the basics of single image sensor for two-dimensional images of a three-dimensional device, so that we can obtain a satisfactory device parameter.

Chapter 1
Introduction

With the development of electric telegraph by William Cooke and Charles Wheatstone, the telecommunication technology has been commercialized in 1838 [1]. This technology was rapidly replaced by Samuel Morse, with the introduction of the *Morse code* in 1844, which reduced the communication into dots and dashes, and listening to the receiver [2]. The wireless technology came to existence in 1901 when Guglielmo Marconi successfully transmitted radio signals across the Atlantic Ocean. The possibility of replacing the telegraphs and telephone communications with wave transmission is an exciting future. However, the two-way wireless communication has been materialized in the military, although it remained limited to one-way radio and television broadcasting by large and expensive stations. The ordinary two-way phone conversations would still go over wires for many decades. The invention of the large-scale integration (LSI) transistor, the development of Shannon's information theory, and the conception of the cellular system all at Bell Laboratories paved the way for affordable mobile communications.

The end of the twentieth century is remembered for the amazing growth of the telecommunication industry. The main cause for this event is the introduction of digital signal processing in the wireless communications, driven by the development of high-performance low-cost CMOS technologies for very-large-scale integration (VLSI). However, the radio-frequency (RF) analog front end remains the bottleneck for low-cost RF systems. The RF front-end design is pushed towards higher levels of integration and integration in low-cost CMOS technology, rendering significant space, cost, and power reductions. The cellular phones are no doubt the most popular wireless communication device currently in use. However, such a system can be divided into the user part (handset) and the infrastructure part (base stations). The user part consists of a transmitter and a receiver commonly known as transceiver system [3, 4].

The radio spectrum refers to the part of the electromagnetic spectrum corresponding to the radio frequencies (below 300 GHz). However, different parts of the radio spectrum are used for different radio transmission technologies and applications. The radio spectrum is typically government regulated in the developed countries and is sold or licensed to operators of private radio

V.M. Srivastava and G. Singh, *MOSFET Technologies for Double-Pole Four-Throw Radio-Frequency Switch*, Analog Circuits and Signal Processing 122,
DOI 10.1007/978-3-319-01165-3_1,

Table 1.1 Electromagnetic radiation spectrum

Frequency	Abbreviation	Frequency range	Wavelength
Tremendously low frequency	TLF	Below 3 Hz	Above 10^5 km
Extremely low frequency	ELF	3–30 Hz	10^4–10^5 km
Super low frequency	SLF	30–300 Hz	10^3–10^4 km
Ultra low frequency	ULF	300–3,000 Hz	100–10^3 km
Very low frequency	VLF	3–30 kHz	10–100 km
Low frequency	LF	30–300 kHz	1–10 km
Medium frequency	MF	300 kHz–3 MHz	100 m–1 km
High frequency	HF	3–30 MHz	10–100 m
Very high frequency	VHF	30–300 MHz	1–10 m
Ultra high frequency	UHF	300 MHz–3 GHz	10 cm–1 m
Super high frequency	SHF	3–30 GHz	1–10 cm
Extremely high frequency	EHF	30–300 GHz	1 mm–1 cm
Tremendously high frequency/far infrared	THF/THz/FIR	300 GHz–3 THz	0.1–1 mm
Mid infrared	MIR	3–30 THz	10 μm–0.1 mm
Near infrared	NIR	30–300 THz	1–10 μm
Near ultraviolet	NUV	300 THz–3 PHz	0.1–1 μm
Extreme ultraviolet	EUV	3–30 PHz	10 nm–0.1 μm
Soft X-rays	SX	30–300 PHz	1–10 nm
Soft X-rays	SX	300 PHz–3 EHz	0.1–1 nm
Hard X-rays	HX	3–30 EHz	10 pm–0.1 nm
Gamma rays	Y	30–300 EHz	1–10 pm

transmission systems for the purpose of telecommunication or broadcast for television stations. To prevent interference and allow for efficient use of the radio spectrum, similar services are allocated in the bands. For example, the broadcasting, mobile radio, or navigation devices will be allocated in non-overlapping ranges of frequencies. However, each frequency range/band behaves differently and performs different functions and shared by civil, government, and military users of all nations according to International Telecommunications Union (ITU) radio regulations. For the communication purposes, the usable frequency range is in the range from 3 Hz to 300 GHz. In some cases, 100 THz is used for research purposes. These ranges of the frequency bands are given in Tables 1.1 and 1.2. The frequency band standards are also available in International Telecommunications Union radio regulations.

1.1 Transceiver Systems

With the development of wireless communication technology, the demand of high data rate wireless local area network (WLAN) systems is growing rapidly. The heterodyne receiver architecture is the most commonly used receiver architecture in the wireless communication systems. Due to the reduction of complexity and power

Table 1.2 Electromagnetic radiation spectrum based on IEEE

Frequency	Abbreviation	Frequency range
High frequency	HF band	3–30 MHz
Very high frequency	VHF band	30–300 MHz
Long wave	L band	1–2 GHz
Short wave	S band	2–4 GHz
Compromise between S and X	C band	4–8 GHz
Crosshair	X band	8–12 GHz
Kurz-under	K_u band	12–18 GHz
German Kurz (short)	K band	18–27 GHz
Kurz-above	K_a band	27–40 GHz
V band	V band	40–75 GHz
W band	W band	75–110 GHz
Long wave	G band	110–300 GHz

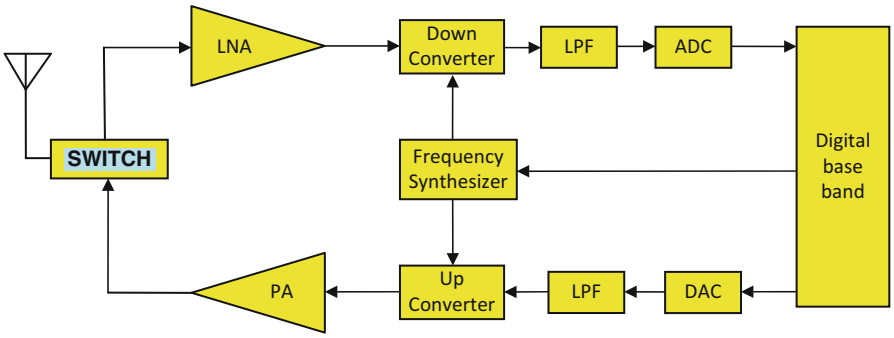

Fig. 1.1 Simple RF transceiver architecture [10]

consumption. The direct down-conversion architecture has become more popular nowadays. However, compared to the heterodyne architecture, it is easier to integrate the complete system on a single chip. Various technologies such as BiCMOS, SiGe HBT, and Bipolar are used to design radio-frequency (RF) switches; however, CMOS technology is very suitable for integration of both analog and digital circuits on a single chip. So the CMOS technology is preferred for implementation of RF front-end circuitry.

A basic heterodyne RF transceiver front-end system is shown in Fig. 1.1. In this architecture, the received RF signals are first passed through a band-pass filter and then switched to an low noise amplifier (LNA). Due to its gain, the LNA essentially sets the signal-to-noise ratio for the receiver chain. The amplified signals are filtered for improved image rejection and down-converted to an intermediate frequency (IF) with a mixer. The signals at IF are then filtered for channel selection and shifted in frequency to baseband by a second mixer [5–7]. However, the transmission process is complementary to the reception process. During the transmission, the signals at baseband are up-converted to the RF carrier using an IF stage. The power

amplifier (PA) is used to drive the antenna. A transceiver (*T*/*R*) switch is used to connect/disconnect the antenna for transmit and receive processes. The direct down-conversion or homodyne architecture mixes the incoming RF signals with the carrier frequency to generate signals directly at baseband. Similarly, the signals are directly up-converted to the RF carrier using only one mixing step during transmission. The integrated circuit design industry is increasingly improving the direct down-conversion architectures to facilitate further integration by reducing the number of components required. This architecture uses standard CMOS technology and includes an LNA and PA on the same piece of silicon.

However, highly integrated transceiver solutions for the 802.11b/g standards have also been presented by Chien [8] and Kluge [9]. Among the component blocks of Fig. 1.1, the transceiver switch stands out as a candidate for on-chip integration because the MOSFET device is optimized to operate as a switch. In early days, the radio transceiver switches have been designed using PIN diode and FET, which consume more power. As the modern portable devices demand less power consumption switches, therefore the PIN diodes and FETs are gradually replaced by the MOSFETs such as n-type MOSFET and p-type MOSFET [10–12]. The MOSFET analog switches use the MOSFET channel as a low ON-state resistance switch to pass analog signals at switch-ON condition and as high impedance at switch-OFF condition and the signals flow in both directions across a MOSFET switch. The source is a negative side for n-type MOSFET or more positive side for p-type MOSFET. All of these switches are limited on what signals they can pass or stop by their gate–source voltage, gate–drain voltage, and source–drain voltages; exceeding the voltage, current, or power limits will potentially damage the switch.

In the latest technologies, CMOS fabrications have resulted in deep submicron transistors with higher transit frequencies and lower noise figures, so the trend started to explore the use of CMOS technology in RF circuits. This is also in the view of a system on a chip realization, where digital, mixed-signal baseband, and HF transceiver blocks would be integrated on a single chip. This technique has the ability to integrate RF circuits. Other advantages offered by silicon CMOS technologies are the low cost due to the volume of wafers processed and the low power consumption feature of MOSFETs, which makes it suitable for portable applications. It has been known that for analog and RF applications, the accuracy of circuit simulations is strongly determined by the device models. However, the accurate device models become crucial to correctly predict the circuit performance.

The RF/microwave switching elements using silicon CMOS technology are being investigated and presented as an alternative to the traditional PIN diode and GaAs MESFET devices. The silicon CMOS RF switching elements are attractive because of their potential application in all silicon monolithic CMOS solutions for completely integrated baseband and RF functions in low-cost wireless, mobile satellite, and personal communication systems. RF switches can be used at several places in RF front ends. In a transceiver switch, a double-pole single-throw (DPST) arrangement of switches multiplexes the use of the antenna between the PA and LNA. The transceiver switches must have a high linearity to ensure that the high-power signals (~2 W) at the output of the PA are transmitted to the antenna

with minimum distortion [13, 14]. This linearity requirement presents a challenge to integrate transceiver switches into on-chip designs especially as the supply voltage in standard CMOS continues to decrease.

In addition to the transceiver switch application mentioned above, RF switches could be used to select capacitors, for example, tuning of a voltage-controlled oscillator (VCO). In this application, the potential challenge is to obtain a low ON-state resistance and a low OFF-state capacitance. In a given technology, the ON-state resistance and OFF-state capacitance are inversely related to each other since the resistance–capacitance product in a modern CMOS technology is not as low as desired [15, 16].

In the receiver part of the communication system (a handset), low-noise RF transistors are used to amplify the incoming signals. As in any LNA, the use of low or minimum noise figure transistors is desired. The noise requirements for the RF devices for this application are, however, not as stringent as those for the satellite communications. In wireless communications, the receiver experiences the noise of the environment, which is interference-dominated, whereas in the satellite communications, the signal comes from the sky with less background noise [17].

Consequently, for the wireless communications, the noise produced intrinsically in the RF devices is somewhat negligible comparing to that from the noisy environment. However, another requirement for the communication system is the reduction of power consumption. At present, a supply voltage of 3 V has been established as a standard [18]. To deliver a high output power combined with a high efficiency at a limited supply voltage of 3 V, RF power transistors possessing a large ON-state current and a low ON-state resistance are required in the transmit section of the handset.

1.2 Radio-Frequency Switches

In the radio transceiver of the advanced communication systems, multiple antenna system is used to replace the traditional single antenna circuitry to improve the transmission capability and reliability. In the antenna selection system, the signals from a subset of the antennas are processed at any time by the limited bandwidth of RF, which is available for the receiver. Hence, the transmitter needs to send pilots multiple times to enable the receiver to estimate the channel state of all the antennas and select the best subset. With the multiple antennas, the data transfer rate can be increased by the same factor. For example, if we have n antennas as $a_1, a_2, a_3, \ldots, a_n$ used in the transceiver, then data transfer rate will increased by factor of n as it is number of antenna used. For such communication system, the antenna selection and switch mechanism is essential to circumvent the uses of several RF chains, associated with the various antennas. The desired switching system must have a simple and low-cost structure which also confined all the improvement of multiple-input, multiple-output (MIMO) systems [19, 20].